Komshine

enabling today,inspiring tomorrow

6s splicing time | 16s heating | Three-in-one fixture | Six motor

Six motor trunk welding machine

FX39

Komshine
FX39
ARC FUSION SPLICER
X/Y
Menu

PUSH
09:57
Splice Mode
Splice Option
Settings
Maintenance
Arc Calibration
: Enter Menu
: Start Welding

Six motor

6s splicing

16s heating

splicing 0.01dB

7800mAh

Three-in-one fixture

Stretch resistance

shockproof and anti-fall

Core alignment

Double cooling tank

Twice as much carrying capacity as normal

2 times
the carrying
capacity

Komshine
FX39
ARC FUSION SPLICER
X/Y
Loss estimate
Y
Fiber:-0.04°
Fiber:-0.09°
H: 0.06°
V: 0.77°
H: 0.07°
V: 0.27°
:Manual Arc
:Continue
H: -0.16°
V: 0.52°

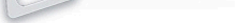

7800mAh lithium battery

Fast charging, support more than 400 times on one charge splicing +heating

Charging for 3.5h

400 times of welding + heating

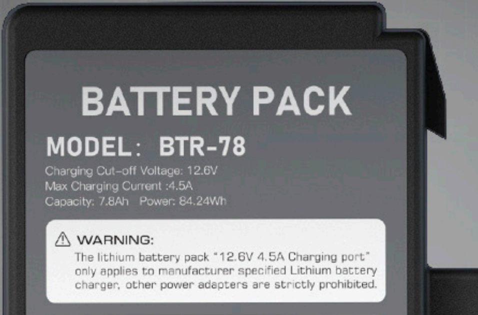
BATTERY PACK
MODEL: BTR-78
Charging Cut-off Voltage: 12.6V
Max Charging Current :4.5A
Capacity: 7.8Ah Power: 84.24Wh
⚠ WARNING:
The lithium battery pack "12.6V 4.5A Charging port" only applies to manufacturer specified Lithium battery charger, other power adapters are strictly prohibited.

READ INSTRUCTION MANUAL BEFORE USE.

1. Do not disassemble this battery pack.
2. Do not short-circuit termainals.
3. Do not discard battery pack into fire.
4. Use only specified battery charger to recharge battery pack.
5. When recharging battey pack,
   - Do not place in direct sunshine.
   - Atmospheric temperature Must be 40℃ (104℉) or lower.
6. The lithium battery pack can be separated from the Fusing Splicer and charged with a charger.

6 seconds fast splicing

In the single-mode and fast mode, rapid discharge and welding, improve work efficiency

Only needs 6 seconds

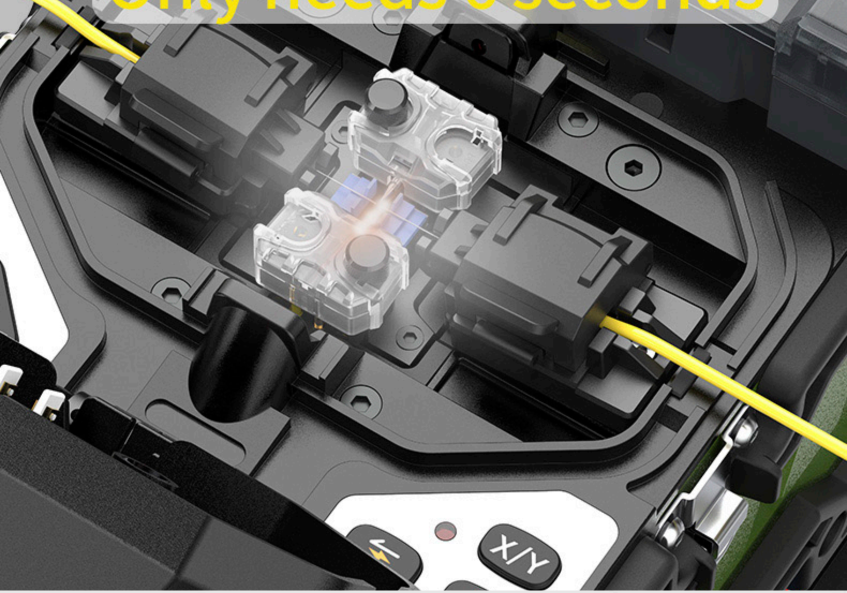

Fast heating in 16 seconds

In the fast mode of 40mm heat shrinkable tube, 16s rapid heating, which improves work efficiency and saves time

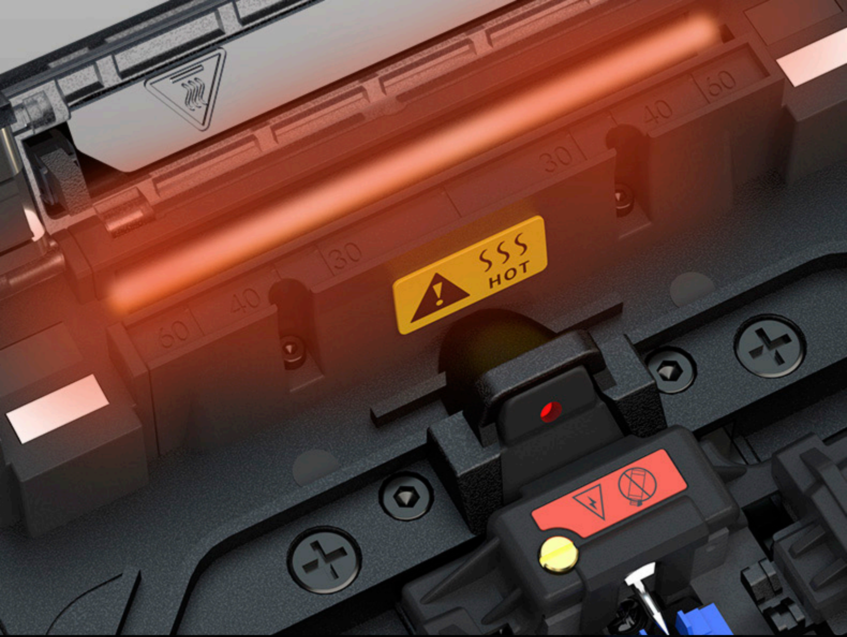

6 motor positioning

Equipped with 6 motors and precise micro-step guides, less loss, faster time and higher work efficiency than 4-motor positioning fusion splicers

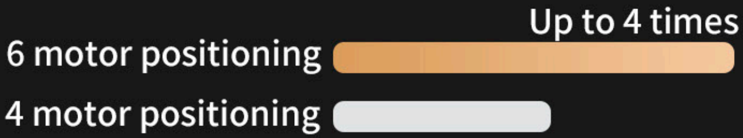

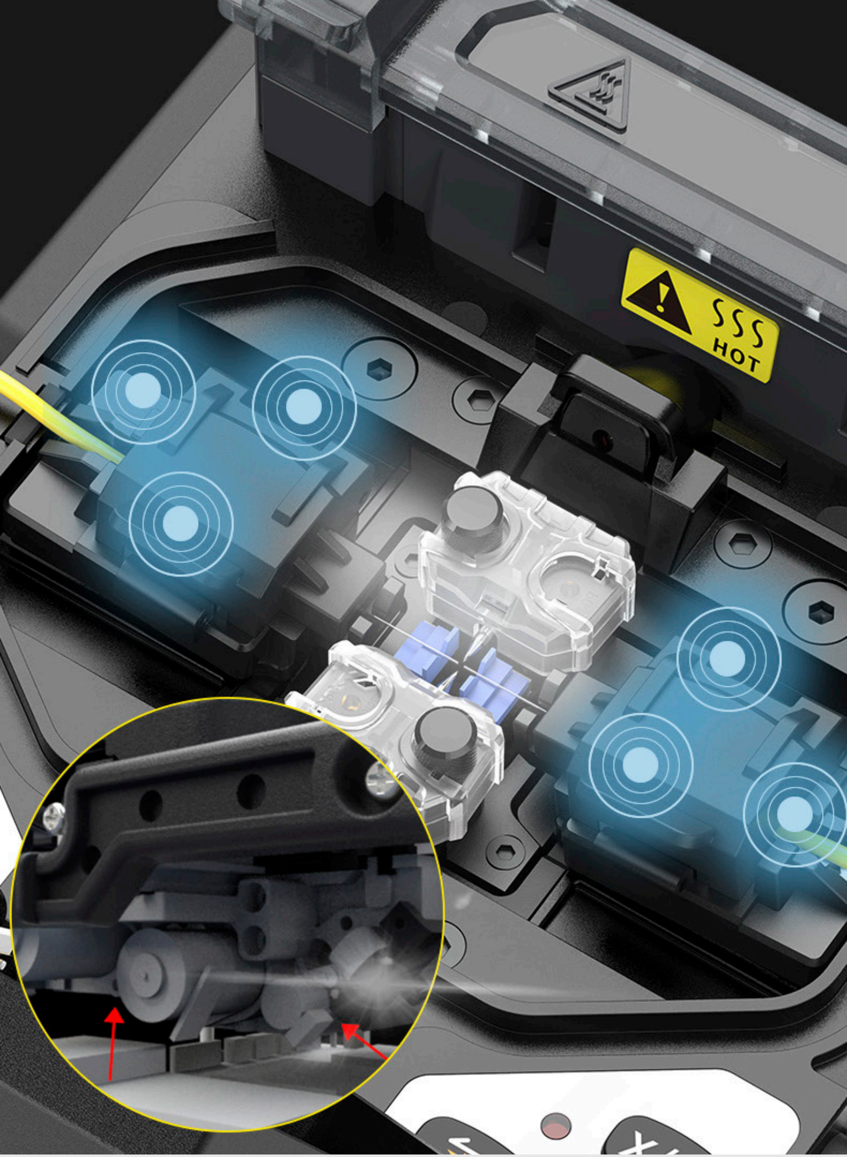

Core alignment

The 4.3-inch high-resolution color LCD is the display screen, providing customers with large and clear fiber core display images, splicing loss , core alignment, clear at a glance

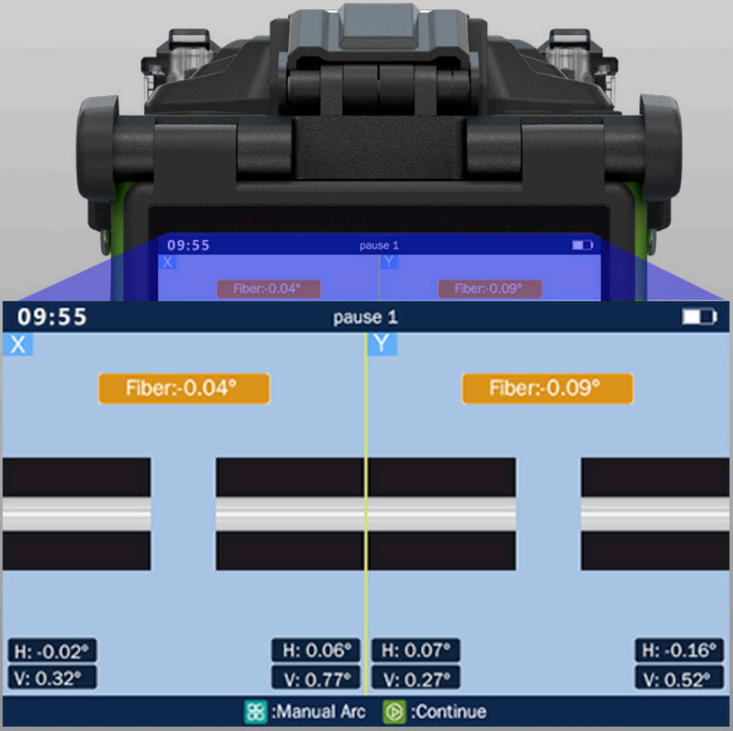
09:55
pause 1
X
Y
Fiber:-0.04°
Fiber:-0.09°
H: -0.02°
V: 0.32°
H: 0.06°
V: 0.77°
H: 0.07°
V: 0.27°
H: -0.16°
V: 0.52°
:Manual Arc
:Continue

Three–in–one fixture

Fully automatic splicing of optical fiber, saving time and effort, splicing position with LED lighting

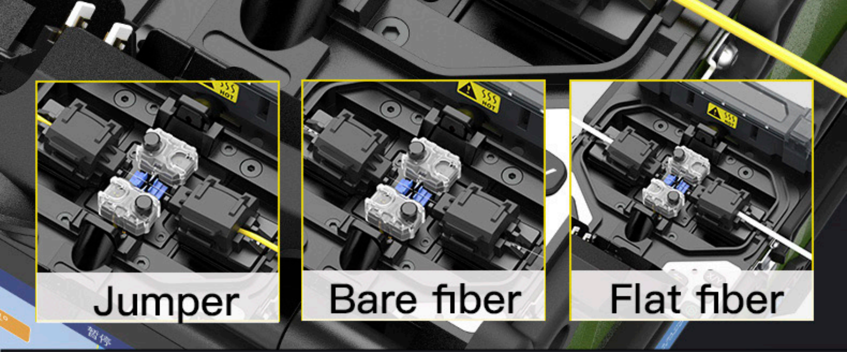
Jumper
Bare fiber
Flat fiber
暂停

Three–in–one fixture

Fully automatic splicing of optical fiber, saving time and effort, splicing position with LED lighting

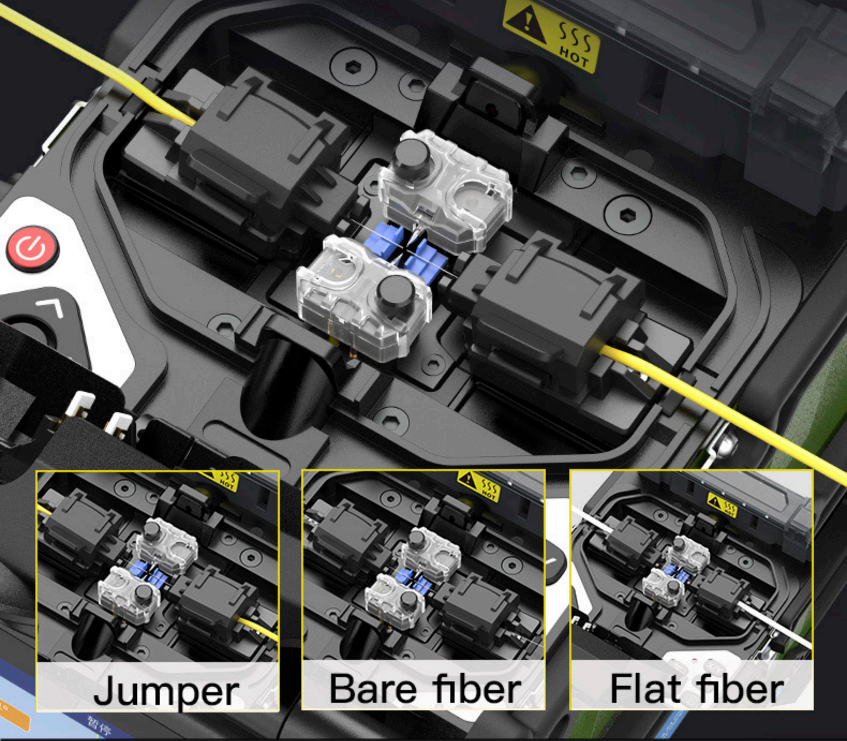
HOT
Jumper
Bare fiber
Flat fiber

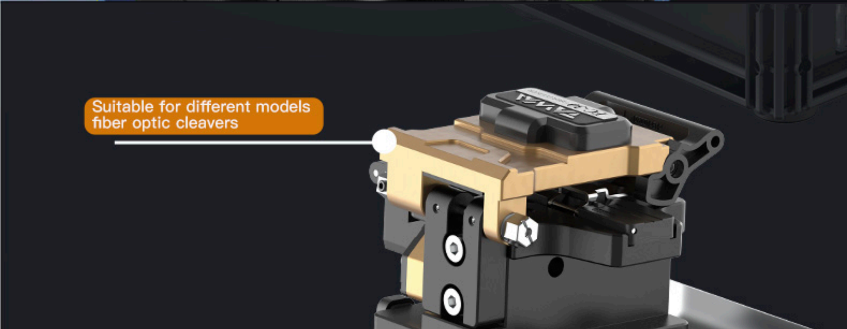
Suitable for different models fiber optic cleavers

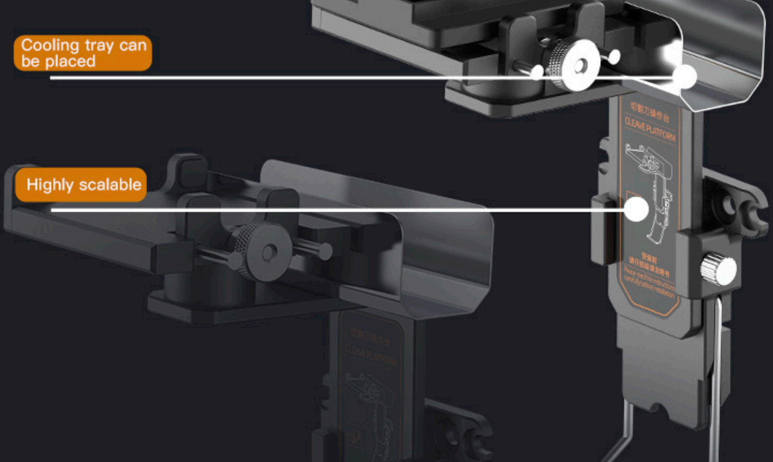
Cooling tray can be placed
Highly scalable
CLEAVE PLATFORM

Installation instructions

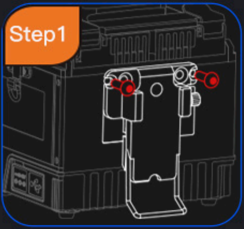

Use the screw to fix the base

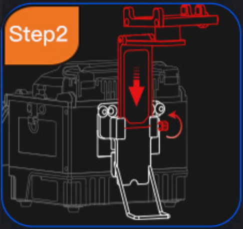

Insert into the base and tighten

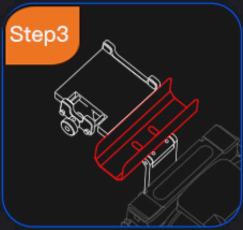

Place the cooling tray

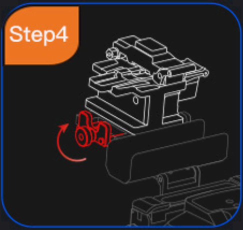

Fix the cleaver with the screw

Silicone sheath around the body

Can be effectively waterproof, anti-fall, shockproof

Silicone sheath

Waterproof

Anti-fall

Shockproof

Komshine
FX39
ARC FUSION SPLICER
Menu
09:57
Splice Mode
Splice Option
Heater Mode
Arc Calibration
Maintenance
Settings
: Enter Menu
: Start Welding

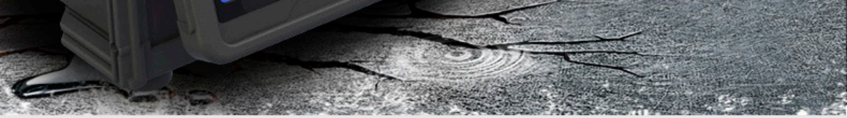

Engineering scope

Trunk, metropolitan area network optical fiber project

Security monitoring

Installation and

maintenance engineering

FTTH fiber to the home

technical parameters

Alignment method	Core to core alignment
Applicable fiber type	SM(ITU–T G.652&G.657) / MM(ITU–T G.651) / DS(ITU–T G.653) / NZDS(ITU–T G.655)
Fiber type	0.25~3.0 mm / Flat fiber
Fiber clamp	Replaceable universal fixture, SOC fixture (optional)
Fiber diameter	Cladding diameter: 80–150μm, Coating diameter：100~1000μm
Cutting length	8~16 mm
Splicing mode	Maximum 128 groups
Splicing loss	SM: 0.02dB / MM: 0.01dB / DS: 0.04dB / NZDS: 0.04dB / G.657: 0.02dB ★①
Return loss	>>60dB
Splicing time	6 seconds(SM G652 QUICK mode)
Loss estimation	Yes
Heating time	16Seconds(SM G652 250um 40mm heat shrink tube,based on quick mode)User adjustable
Applicable heat shrinkable length	20mm, 30mm, 40mm, 50mm, 60mm
Heating mode	Maximum 32 groups
Battery capacity	7800mAh lithium battery，each cycle supports 400 times splicing and heating★②
Electrode life	About 5000 times discharges★③
Start automatically	Splicing/heating
Automatic fiber identification	/

Automatic discharge calibration	Automatically calibrate according to ambient temperature and air pressure changes
Result storage	10000 sets of splice data, or 2000 sets of splice images
Tension testing	1.96~2.25N
Operating conditions	Altitude:0~5000meters,Relative humidity:0~95%, -20~50 ,Maximum wind speed:15meter/second
Storage condition	temperature 0~95% , -20~60°C
Display screen	4.3 inches, high-definition LCD display
Zoom in and display	X, Y, XY, X/Y : 320 times magnification
Power supply	AC Input 100-240V, DC Input 9-14V
Port	USB2.0
Weight	1.72kg without battery / 2.25kg with battery
Size	158H x 132W x 157D mm (including rubber bumper)

★① Use standard optical fiber, according to the ITU-T and IEC standard cut method to test the results, the loss will change due to the environment and the characteristics of the optical fiber.

★②The results measured in room temperature environment are largely affected by the battery usage status and operating environment

★③ The life of the electrode rod will change due to the environment, fiber type and splicing mode